OWNERS MANUAL - MODEL 17000V HOT AIR DRYER

TABLE OF CONTENTS:

- **PRODUCT INFORMATION** **PAGE 1**
- **SPECIFICATIONS** **PAGE 2**
  - o VOLTAGE SUPPLY
  - o MOTOR
  - o HEATER
- **INSTALLATION** **PAGE 3-4**
  - o WALL MOUNT PAGE 3
  - o VAULT READY PAGE 3
  - o PEDESTAL MOUNT PAGE 4
  - o ELECTRICAL INFO PAGE 4
- **SETUP AND OPERATION** **PAGE 5-6**
  - o REMOVING LOCKS PAGE 5
  - o DOOR DECALS PAGE 5
  - o PROGRAMMING DISPLAY PAGE 5-6
- **TROUBLESHOOTING** **PAGE 7**
- **REPLACEMENT PARTS** **PAGE 8 (PAGE 10, 220V)**
- **ELECTRICAL DIAGRAM** **PAGE 9 (PAGE 11, 220V)**

PRODUCT INFORMATION

Please take a moment to fill out the information below in order to aid us with any future sales or service inquiries. Model number and serial number information can be found on the serial tag located inside the control box and/or on the lower exterior of the can. Key number can be found on the tag that comes attached to the keys. There may be more than one key number depending on unit.

Please keep this information with your records.

MODEL#:_____

SERIAL#:_____

KEY NUMBER(S):_____

DATE PURCHASED:_____

DISTRIBUTOR:_____

J.E. Adams Industries
1025 63rd Ave. S.W.
Cedar Rapids, IA 52404
1-800-553-8861
www.jeadams.com

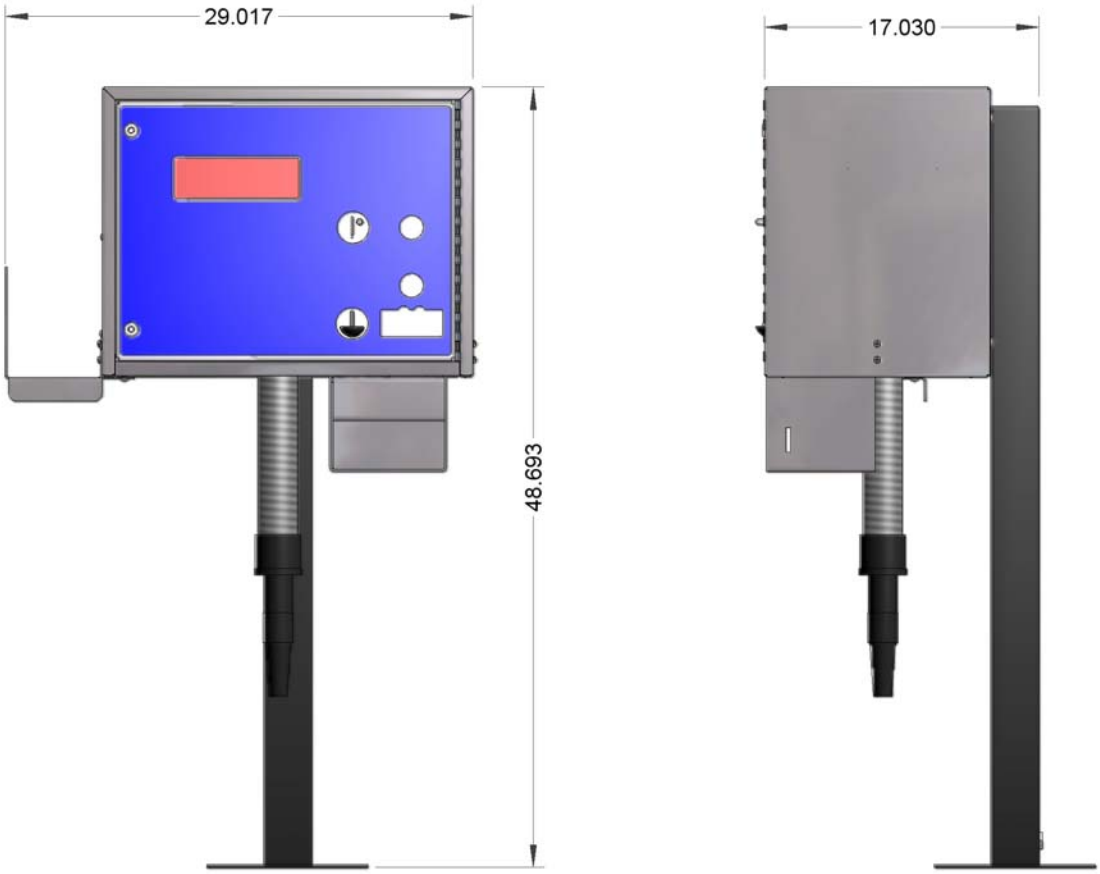

(pictured above with 8819 base)

SPECIFICATIONS:

- SUPPLY VOLTAGE: 120VAC, 60HZ, 30A
- BLOWER: 120VAC, 60HZ, 14.2A
- HEATER: 120VAC, 60HZ, 10A, 1200 WATTS

- OPTIONAL 220V / 50HZ UNITS AVAILABLE
- SUPPLY VOLTAGE: 220VAC, 50HZ, 15A
- BLOWER: 220VAC, 50HZ, 8A
- HEATER: 220VAC, 50HZ, 5A, 1200 WATTS

INSTALLATION:

WALL MOUNT: MOUNT IS THE SAME FOR 11000, 12000, 13000, 16000, AND 17000. 12000 SHOWN BELOW:

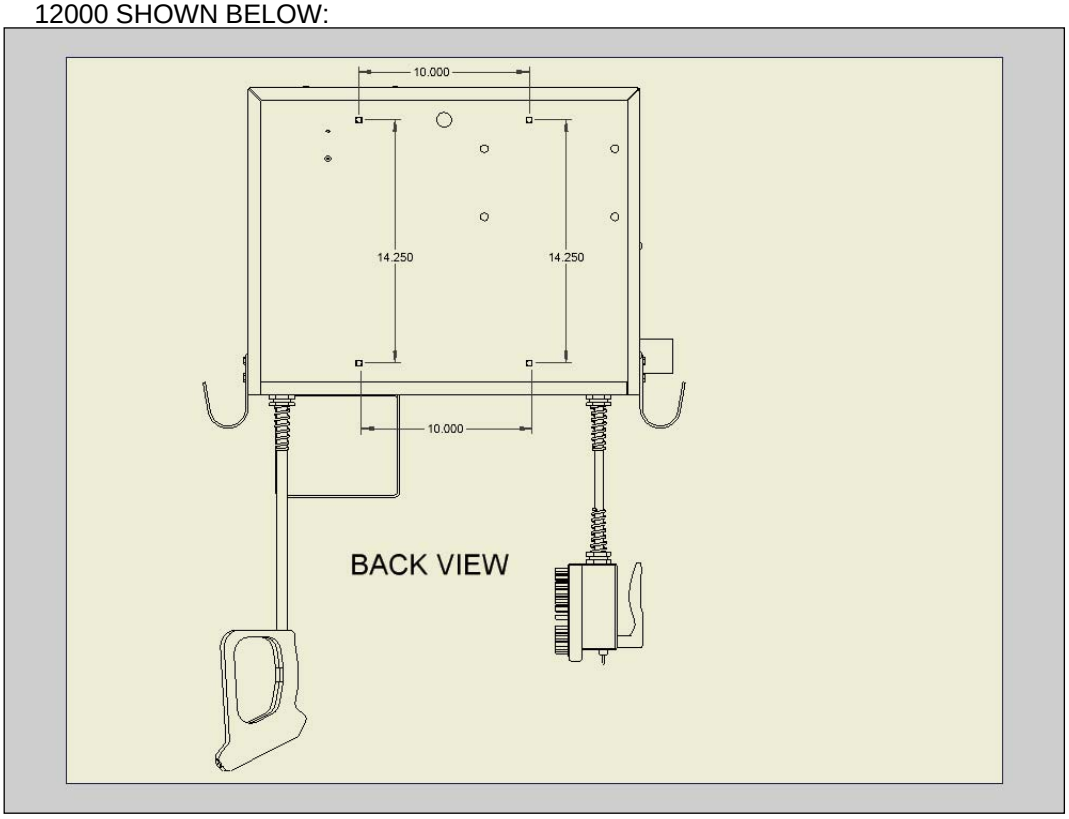

5/16-18 MAX BOLTS RECCOMENDED FOR INSTALLATION

VAULT READY 11000, 12000, 13000, 16000, AND 17000 (TOP VIEW)

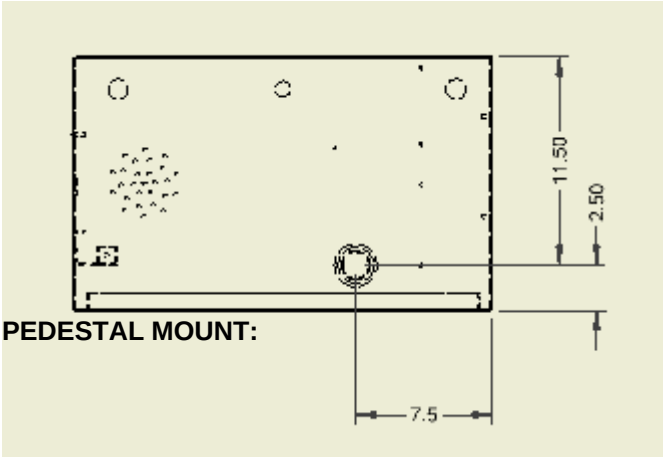

PEDESTAL MOUNT:

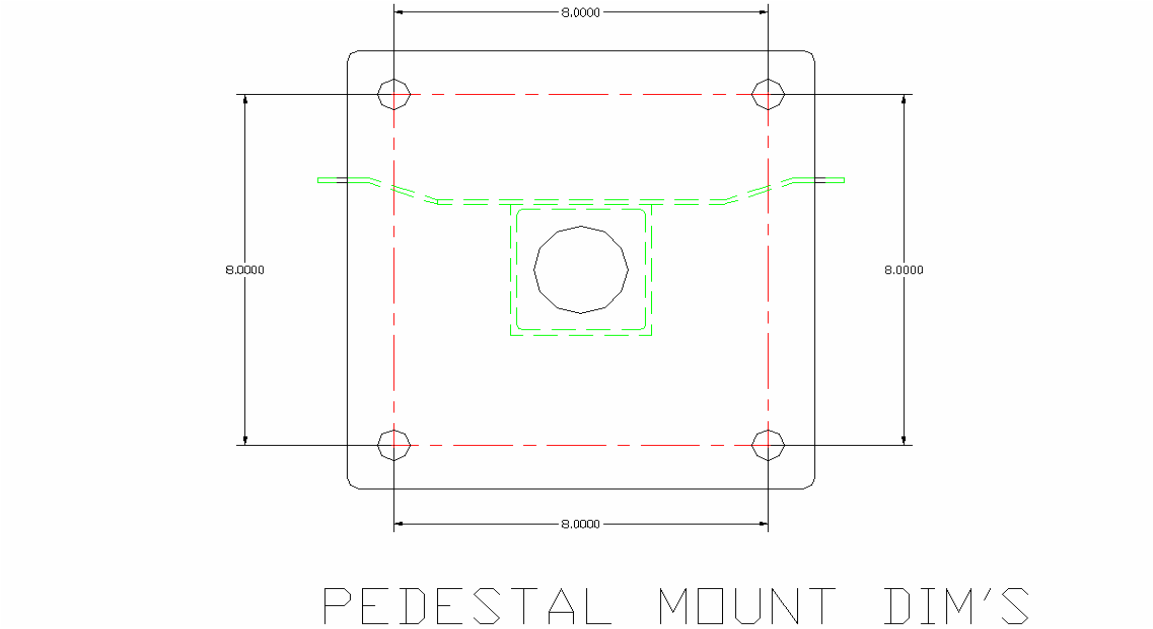

- MOUNT PEDESTAL TO GROUND
- MOUNT UNIT TO PEDESTAL AND SECURE WITH 5/16-18 NUTS.

ELECTRICAL SUPPLY REQUIREMENT:

- MIN 30AMP 120V SERVICE, DEDICATED LINE - (15A FOR 220V UNITS).
- WIRE GAUGE TO BE CONSISTANT WITH LOCAL ELECTRICAL CODES.
- SEE DRAWING BELOW FOR WIRE INSTALLATION FOR WIRE ACCESS POINTS AND FOR WIRE HOOK UP.
- INSERT WIRE INTO TERMINAL STRIP AND SCREW INTO PLACE.

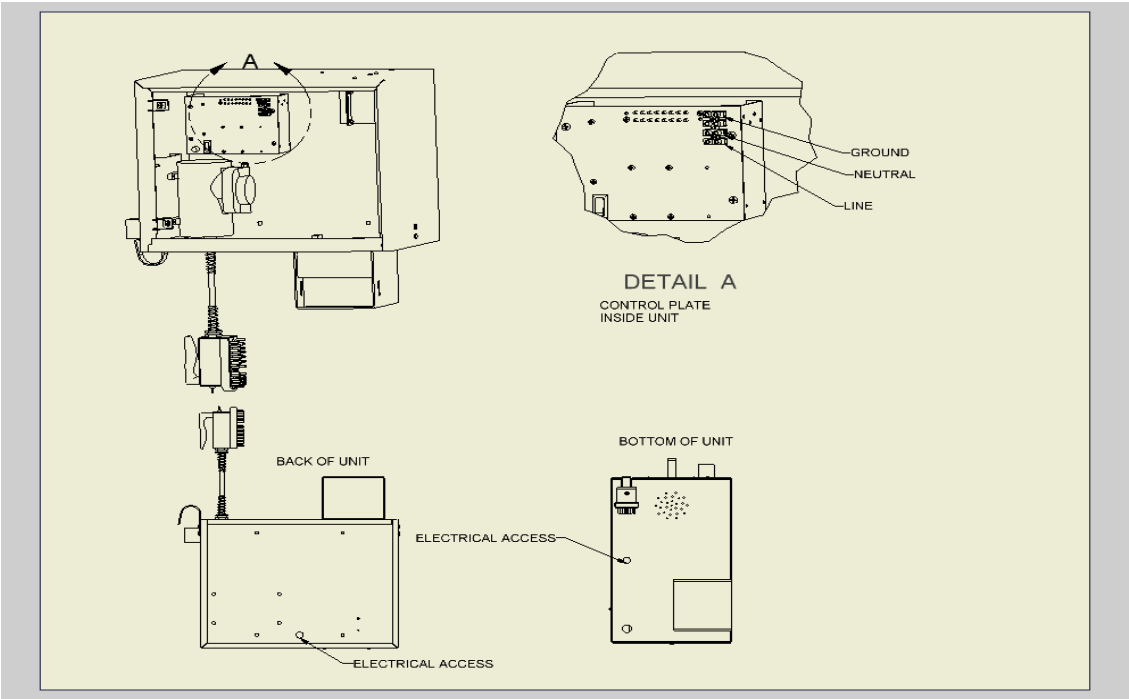

SET UP & OPERATION

NOTE: TO OPEN DOOR LOCKS, TURN COUNTER CLOCKWISE 10-12 TIMES

- ATTACH DESIRED PRICING DECALS TO DOOR

- DIXMOR DISPLAY PROGRAMMING WITH OPTIONAL REMOTE (8000-30) SEE BELOW:

1) Press the red power button.
2) Timer will display 0000. At this time type in 4 digit access code. Note code will be 1234 until changed by customer.
3) Once code has been entered display should read ok. If display does not read ok, repeat step 1 and 2.
4) Press CH + button. Timer will display coin value. This should $.25 and should not be changed.
5) Press the CH +button. Display will now read (A: 30) or may be a different time. (A) Will be the time per coin for a single function machine. NOTE: The 12000 series is a “dual function” machine so will be applicable to step 6. Set desired time per coin by using the VOL – to decrease or the VOL + to increase. Once time is entered move to next step. (THIS STEP IS USED ON ALL MACHINES)
6) Press the CH + button. Display will now read (B: 30) or may be different time. (B) Will be the time per coin for SCENT on the 12000 series machine which is a “dual function” machine. Set desired time per coin by using the VOL – to decrease or the VOL + to increase. Once time is entered move to next step.
7) Press the CH + button. Display will now read C. C is not use
8) Press the CH + button. Display will now read D. D is not use.
9) Press the CH + button. Display will now read E. E is not use.
10) Press the CH + button. Display will now read F. F is not use.
11) Press the CH + button. Display will now read (on A). This is the number of coins to start the primary function of the machine. Use the VOL – and VOL + to adjust. Once this is done press the CH+ button and repeat for (B) which is SCENT on the 12000 “dual function” machine only. All other units (B) is non applicable.
12) Press the CH + button. Display will read bonus time. Set if desired. See explanation at the end programming instructions.
13) Press the CH + button. Display will debit mode. Set if desired. See explanation at the end programming instructions.
14) Press the CH + button. Display will delayed start. Set if desired. See explanation at the end programming instructions.
15) Press the CH + button. Display will read HLxx. Set if desired. See explanation at the end programming instructions.
16) Press the CH + button. Display will read Restart off or restart on depending on what is set. Restart off will require a person to put in full amount after unit is turned off to reactivate. Restart on allows for additional coins to be put in the machine to keep unit running. To set use VOL – or VOL + to change.
17) Press the CH + button. Display will now read STD or USER or MIX. To make a custom message use VOL + button to scroll to USER. At this point press and hold CH + button until original message appears. At this time you may change the message simply by using the VOL – or VOL + buttons to change letters. Once message has been entered you must put the symbol / at the end of message. This will tell display that this is the end of the message.
18) Press the CH + button now 5 more times to exit programming.

19) Unit should now be programmed.

Program definitions:

Bonus time settings:

- Amount of time set in bonus time is added to regular time per coin/pulse(e.g. if you want to give 45 seconds for bonus time and your regular time per coin is 30 seconds, you would set bonus time at 00:15)
- Bonus is disabled by setting bonus time to 00:00.
- If bonus time is set to less than one minute, bonus time is added when bonus coin is reached and every coin after that until time expires.
- If bonus time is set at 1:00 or more, bonus will be a "one time" bonus. Bonus time will only be added for bonus coin or multiplies of bonus coin (e.g. 16th coin, 32nd coin, etc). Any other coin will on receive regular time per coin.
- If bonus time is set to 99:00, when bonus coin is deposited, timer will show "-on-" and timer will continue to run until coin switch wire is shorted to ground by a loop detector or other switch closure for a minimum of two seconds.

Debit and credit mode:

- Debit mode: As coins are deposited display shows "$1.75 MORE, $1.50 MORE, $1.25 MORE" etc. until start price is reaches. Once start price is reached display switches to time accumulating until no more coins have been deposited.
- Credit mode: As coins are deposited display shows money accumulating ($.25, $.50, $.75 etc). If timer is also set to delayed start mode timer will continue to show money accumulating until no more coins have been deposited. If timer is set to instant start, as soon as start price is reached, timer will change to time counting down.
- Both mode: As coins are deposited display shows money accumulating ($.25, $.50, $.75 etc). If start price is not reached, after 5 seconds timer will alternate between "add $x.xx more" and amount of money already deposited.

Display programming with push button:

- Unit can be programmed using buttons that are located inside display. One is labeled S2, which is used to change from item to item. One is labeled S1 which is used to set desired value. If you hold down S1 this will cause numbers to decrease. If you repeatedly push S1 numbers will increase.
- When programming with buttons use same instructions as remote except for the following. Where it says to press CH + use S2 and where it says to use VOL + or – use S1.

- CLOSE AND LOCK DOOR AND PLACE INTO SERVICE.

TROUBLESHOOTING:

UNIT WONT RUN	1) CHECK CIRCUIT BREAKER 2) CHECK FUSE IN MACHINE 3) CORRECT NUMBER OF COINS DEPOSITED 4) MAKE SURE POWER SWITCH IS ON
BLOWER NOT COMING ON	1) CHECK INLINE FUSE 2) CONFIRM BURSHES ARE AT LEAST 3/8” LONG (POWER OFF) 3) PROPER AMOUNT OF COINS/BILLS DEPOSITED 4)
HEATER NOT COMING ON (NOTE: HEATER WILL NOT RUN IN TEMPS OVER 85 DEG F AMBIENT AIR TEMPERATURE).	1) UNIT MAY NEED SERVICED IF HEATER IS NOT COMING ON IN COOL WEATHER.

PART NO. 17000V

BILL OF MATERIALS			
ITEM	PART NUMBER	DESCRIPTION	QTY
47	2058-5	NOZZLE, AIR BLOWER	1
48	8000-27	CONNECTOR, WAGO WALL-NUT	2
49	8000-23	5 POLE FEM CONNECTOR	1
50	5943F3220	WIRE, 10G BLACK	24"
51	5943F3229	WIRE, 10G WHITE	24"
52	S17000V	WIRING SCHEMATIC	X

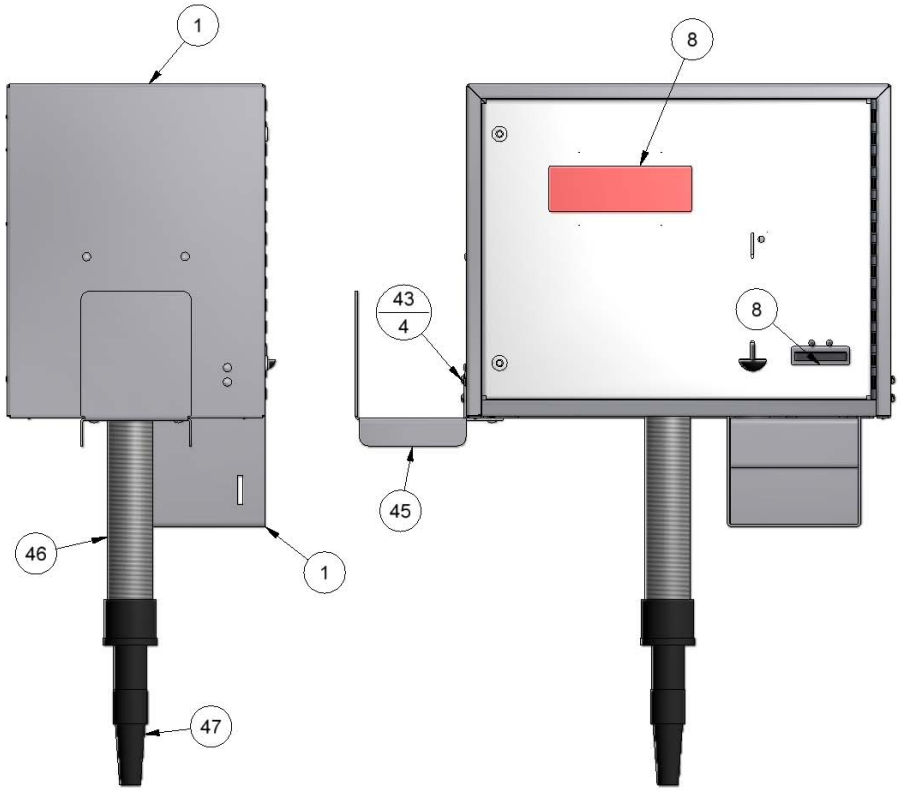

BILL OF MATERIALS			
ITEM	PART NUMBER	DESCRIPTION	QTY
1	17000-1W	CABINET WELDMENT	1
2	17000-5A-1	CONTROL PLATE ASSEMBLY	1
3	5604D1	#10-24 x 1/2 CARR BOLT	6
4	5611D2	NUT, 10-24 UNC KEPP- ZINC	11
8	11000-11A-1	DOOR ASSY,FRAGRANCE	1
9	8204RW	WELDMENT, COIN BOX	1
10	8638	PIN LOCK	1
14	5644D2	CAGE NUT	2
11	11000-6w	BRACKET WELDMENT	2
12	5636D1	#10-24 PHIL. PAN HEAD SCREW	6
21	17000DBLUE	DECAL, 17000, BLUE	1
28	5901D5	ORANGE WIRE CONNECTOR	1
29	8000-23	FEMALE 5 POLE CONN	1
30	1079-3	GASKET	74"
32	9500-56	WIRING HARNESS, VALIDATOR	1
28	29000-59	VALIDATOR FACEPLATE HANDLE	1
29	29000-45W	VALIDATOR FACEPLATE WELDMENT	1
30	29000-44W	VALIDATOR BOX WELDMENT	1
31	5644D1	CAGE NUT	1
32	8958-1	MEDECO SCREW LOCK	1
33	8130-6	MARS 110V BILL VALIDATOR	1
34	5603D9	10 Std NF Nylock Nut	2
35	8157	NUT, #6-32 KEPP NUT STAINLESS	4
36	29000-42W	MOUNTING BRKT,WELDMENT	1
38	8036	NUT, 1/4-20 UNC KEPS	9
40	5721D2	HEAT SHRINK TUBING	20"
39	8061A	TURBO TOWEL ASSY	1
40	8061-720-6	BRACKET, VAC MOTOR	1
41	5601D4	1/4-20 x 3/4 HHCS-SS	3
43	5631d1	1/4-20 SCREW, ONE-WAY HEAD	4
44	5635D2	1/4-20x1/2 CARRIAGE BOLT	2
45	17000-3	BRACKET, HOSE HANGER, BOX CABINETS	1
46	2036-2	HOSE, 2" X 30' BLACK HIGH HEAT	1

REV	NO.	DESCRIPTION	DATE	BY

THIS DOCUMENT SHALL NOT BE REPRODUCED NOR SHALL THE INFORMATION THEREIN BE USED BY OR DISCLOSED TO OTHERS EXCEPT AS AUTHORIZED BY J.E. ADAMS INDUSTRIES

TITLE: AIR BLOWER MACHINE, w/VAL

UNSPECIFIED TOLERANCES
1 PL ±.030
2 PL ±.010
3 PL ±.003
ANGLE ±1.0°

MATERIAL
SCALE
DRAWN BY: JOHN F.
DATE: 5/4/2009

CEDAR RAPIDS, IOWA
J.E. ADAMS INDUSTRIES, LTD

PART NO. 17000V
REV.

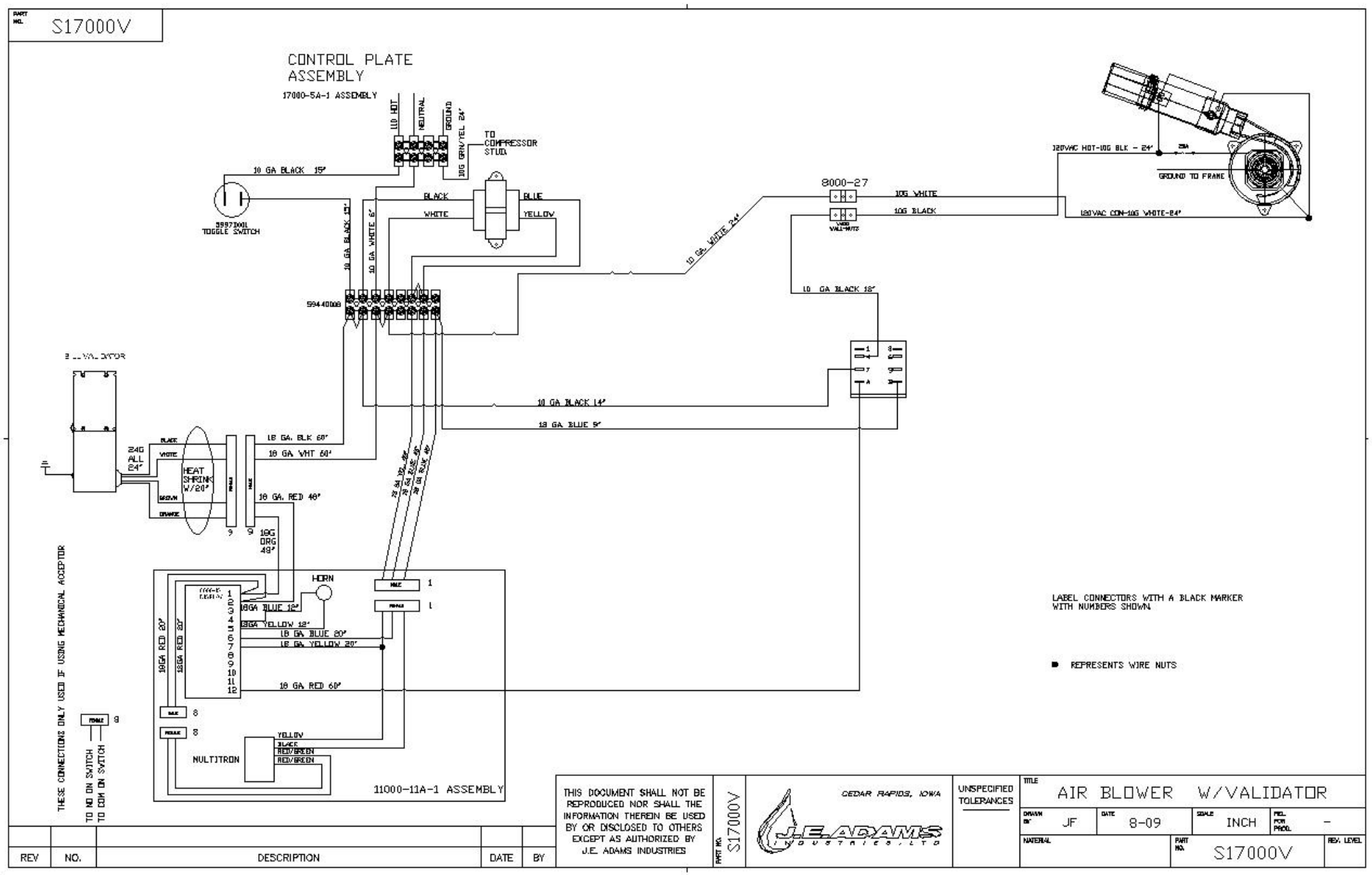
PART NO. S17000V
CONTROL PLATE ASSEMBLY
17000-5A-1 ASSEMBLY
LIO HOT
NEUTRAL
GROUND
10G GRN/YEL 24"
TO COMPRESSOR STUD
10 GA BLACK 15"
TOGGLE SWITCH
BLACK
WHITE
BLUE
YELLOW
10 GA BLACK 12"
10 GA WHITE 6"
10 GA. WHITE 24"
8000-27
10G WHITE
10G BLACK
WIRE WALL-NUTS
120VAC HOT-10G BLK - 24"
GROUND TO FRAME
120VAC CON-10G WHITE-24"
10 GA BLACK 18"
10 GA BLACK 14"
18 GA BLUE 9"
240 AL 24"
HEAT SHRINK W/20"
18 GA. BLK 60"
18 GA WHT 60"
18 GA. RED 48"
19G ORG 48"
HORN
18GA BLUE 12"
18GA YELLOW 12"
18 GA BLUE 20"
18 GA YELLOW 20"
18 GA RED 60"
19GA RED 20"
18GA RED 20"
NULTITRON
YELLOW
BLACK
RED/GREEN
RED/GREEN
11000-11A-1 ASSEMBLY
THESE CONNECTIONS ONLY USED IF USING MECHANICAL ACCEPTOR
TO NO ON SWITCH
TO COM ON SWITCH
LABEL CONNECTORS WITH A BLACK MARKER WITH NUMBERS SHOWN
REPRESENTS WIRE NUTS
REV
NO.
DESCRIPTION
DATE
BY
THIS DOCUMENT SHALL NOT BE REPRODUCED NOR SHALL THE INFORMATION THEREIN BE USED BY OR DISCLOSED TO OTHERS EXCEPT AS AUTHORIZED BY J.E. ADAMS INDUSTRIES
PART NO. S17000V
CEDAR RAPIDS, IOWA
J.E. ADAMS INDUSTRIES, LTD
UNSPECIFIED TOLERANCES
TITLE AIR BLOWER W/VALIDATOR
DRAWN BY JF
DATE 8-09
SCALE INCH
MOD. FOR MODEL -
MATERIAL
PART NO. S17000V
REV. LEVEL

PART NO. 17000-220V

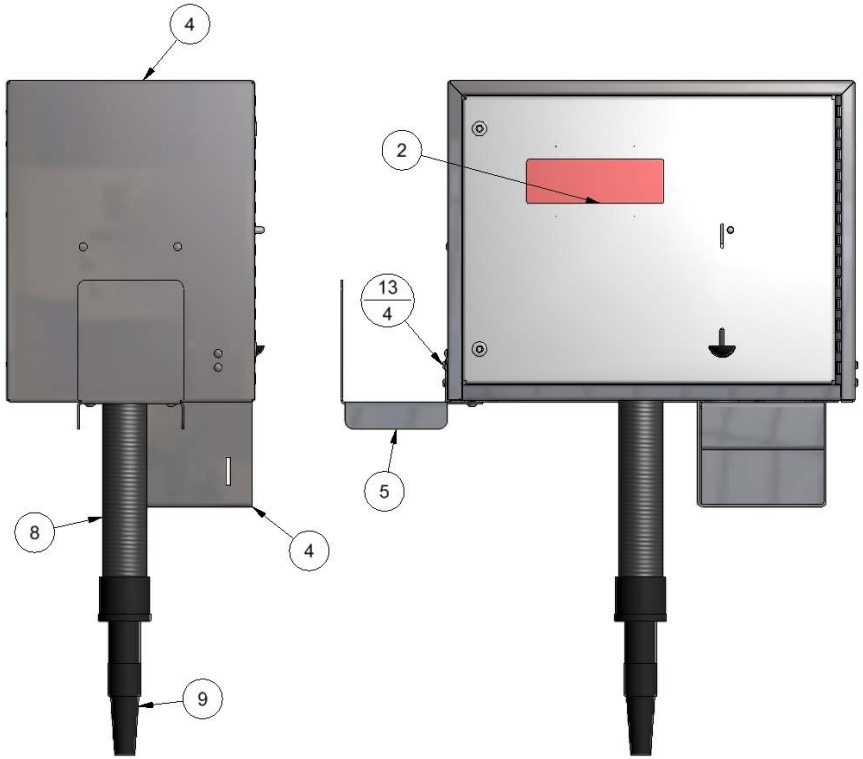

BILL OF MATERIALS

ITEM	PART NUMBER	DESCRIPTION	QTY
1	1079-3	GASKET	74"
2	11000-11A	DOOR ASSEMBLY, SHAM-SPOT	1
3	11000-6w	BRACKET WELDMENT	2
4	17000-1W	CABINET WELDMENT	1
5	17000-3	BRACKET, HOSE HANGER, BOX CABINETS	1
6	17000-5A-220V	CONTROL PLATE ASSEMBLY	1
7	17000DBLUE	DECAL, 17000, BLUE	1
8	2036-2	HOSE, 2" X 30' BLACK HIGH HEAT	1
9	2058-5	NOZZLE, AIR BLOWER	1
10	5601D4	1/4-20 x 3/4 HHCS-SS	3
11	5604D1	#10-24 x 1/2 CARR BOLT	6
12	5611D2	NUT, 10-24 UNC KEPP- ZINC	11
13	5631d1	1/4-20 SCREW, ONE-WAY HEAD	4
14	5635D2	1/4-20x1" CARRIAGE BOLT	2
15	5636D1	#10-24 PHIL. PAN HEAD SCREW	4
16	5644D2	CAGE NUT	2
17	5721D2	HEAT SHRINK TUBING	21.5"
18	5901D2	WIRE NUT, RED	2
19	5901D5	ORANGE WIRE CONNECTOR	1
20	5943F3220	WIRE, 10G BLACK	24"
21	5943F3222	WIRE, 10G RED	24"
22	5979D2	FUSE, 10A	1
23	8000-27	CONNECTOR, WAGO WALL-NUT	2
24	8036	NUT, 1/4-20 UNC KEPS	5
25	8061-720-6	BRACKET, VAC MOTOR	1
26	8061A-220V	TURBO TOWEL ASSY	1
27	8204RW	WELDMENT, COIN BOX	1
28	8638	PIN LOCK	1
29	8833-30A	FUSE HOLDER - 30A	1
30	S17000-220V	WIRING SCHEMATIC	X

REV	NO.	DESCRIPTION	DATE	BY

THIS DOCUMENT SHALL NOT BE REPRODUCED NOR SHALL THE INFORMATION THEREIN BE USED BY OR DISCLOSED TO OTHERS EXCEPT AS AUTHORIZED BY J.E. ADAMS INDUSTRIES

TITLE AIR BLOWER MACHINE, 220V

UNSPECIFIED TOLERANCES
1 PL ±.030
2 PL ±.010
3 PL ±.003
ANGLE ±1.0°

MATERIAL
SCALE
DRAWN BY JOHN F.
DATE 2/9/2011

CEDAR RAPIDS, IOWA
J.E. ADAMS INDUSTRIES, LTD

PART NO. 17000-220V
REV.

PART NO. S17000-220V

NOTES
FIELD WIRING MUST COMPLY WITH LOCAL AND NATIONAL ELECTRICAL CODES

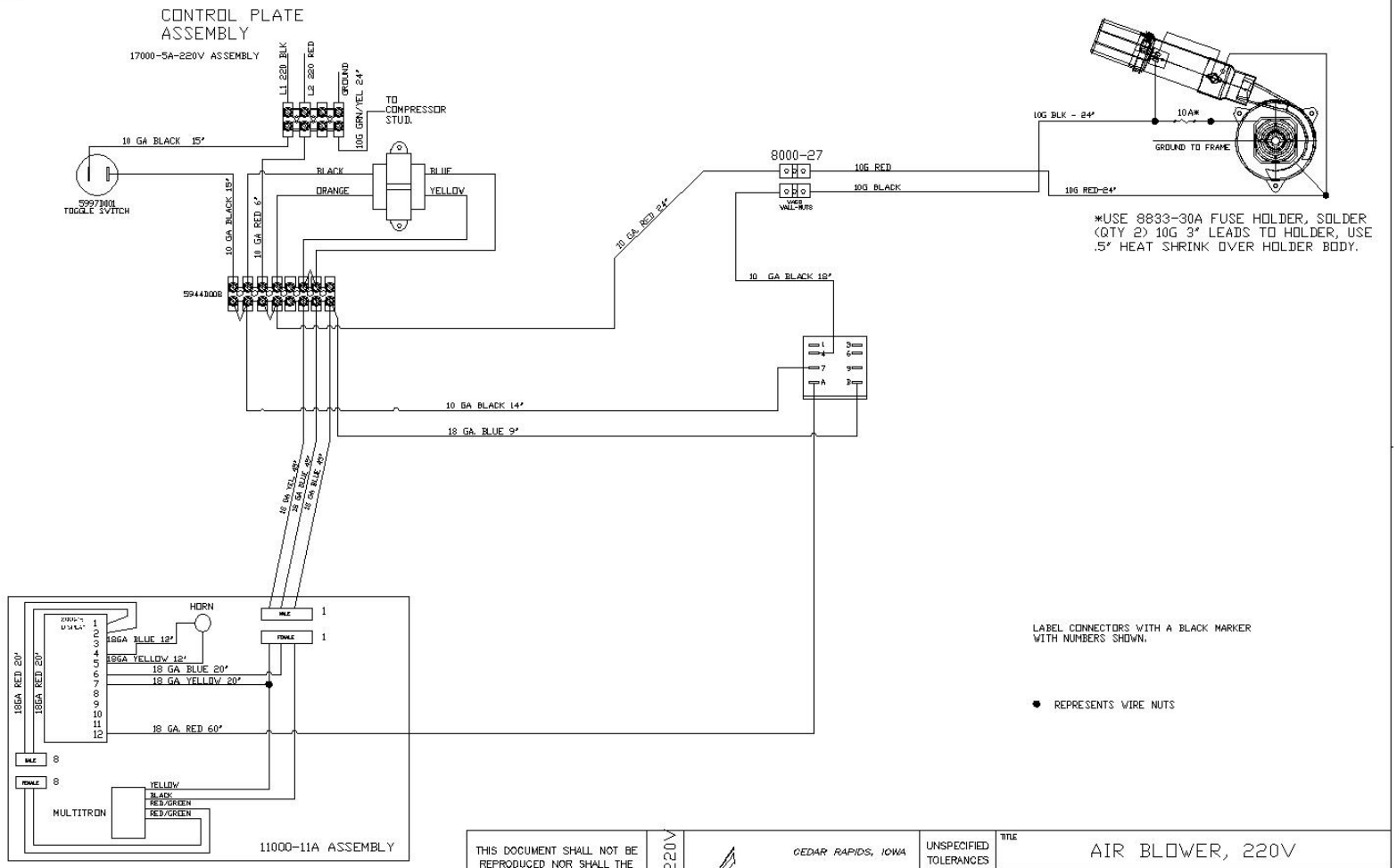

REV	NO.	DESCRIPTION	DATE	BY

THIS DOCUMENT SHALL NOT BE REPRODUCED NOR SHALL THE INFORMATION THEREIN BE USED BY OR DISCLOSED TO OTHERS EXCEPT AS AUTHORIZED BY J.E. ADAMS INDUSTRIES

PART NO. S17000-220V

CEDAR RAPIDS, IOWA
J.E. ADAMS INDUSTRIES, LTD

UNSPECIFIED TOLERANCES

TITLE: AIR BLOWER, 220V

DRAWN BY	DATE	SCALE	REL. FOR PROD.
JF	2-11	INCH	-

MATERIAL

PART NO. S17000-220V

REV. LEVEL